Screwdrivers - Without clutch

GUN SCREWDRIVERS - ERGOVIT series

WATT: 220

Hexagonal coupling: 1/4”

Data sheet

ERGOVIT22SA



Description

OBER power screwdrivers are designed for a wide range of screw driving operations. There is an OBER screwdriver purpose-built for your application. OBER screwdrivers are designed and constructed to ensure top performance in terms of precision, ergonomics, silence, reliability and safety. They are used in all sectors of industry for component assembly and for fixing and tightening all types of screw fastener. The wide range of OBER screwdrivers includes models with torque control, angle screwdrivers with torque control, gun screwdrivers with combined lever/push start, straight and angle screwdrivers, electric screwdrivers and impact screwdrivers.

The overall quality of the screw driving process depends finding the right match between the screw type, the component material, the fastening components and the power screwdriver. To decide the right screwdriver for the job you need to know the torque to be transmitted to the screws and the clutch type.

Technical specification

Screwdrivers - Without clutch

GUN SCREWDRIVERS - ERGOVIT series

WATT: 220

Hexagonal coupling: 1/4”

Data sheet

ERGOVIT22SA

Model	ERGOVIT22SA
Code	8302274
No-load speed - rpm/min	1800
Screw tightening - Metal	5
Screw tightening - Wood	3x30
Torque - Nm	3,5
Length - mm	125
Body - ø mm	38
Air Connection	1/4”GAS
Weight - Kg	0,75
Hose - ø min mm	8
Air consumption - Nl/min	680

Overall dimensions

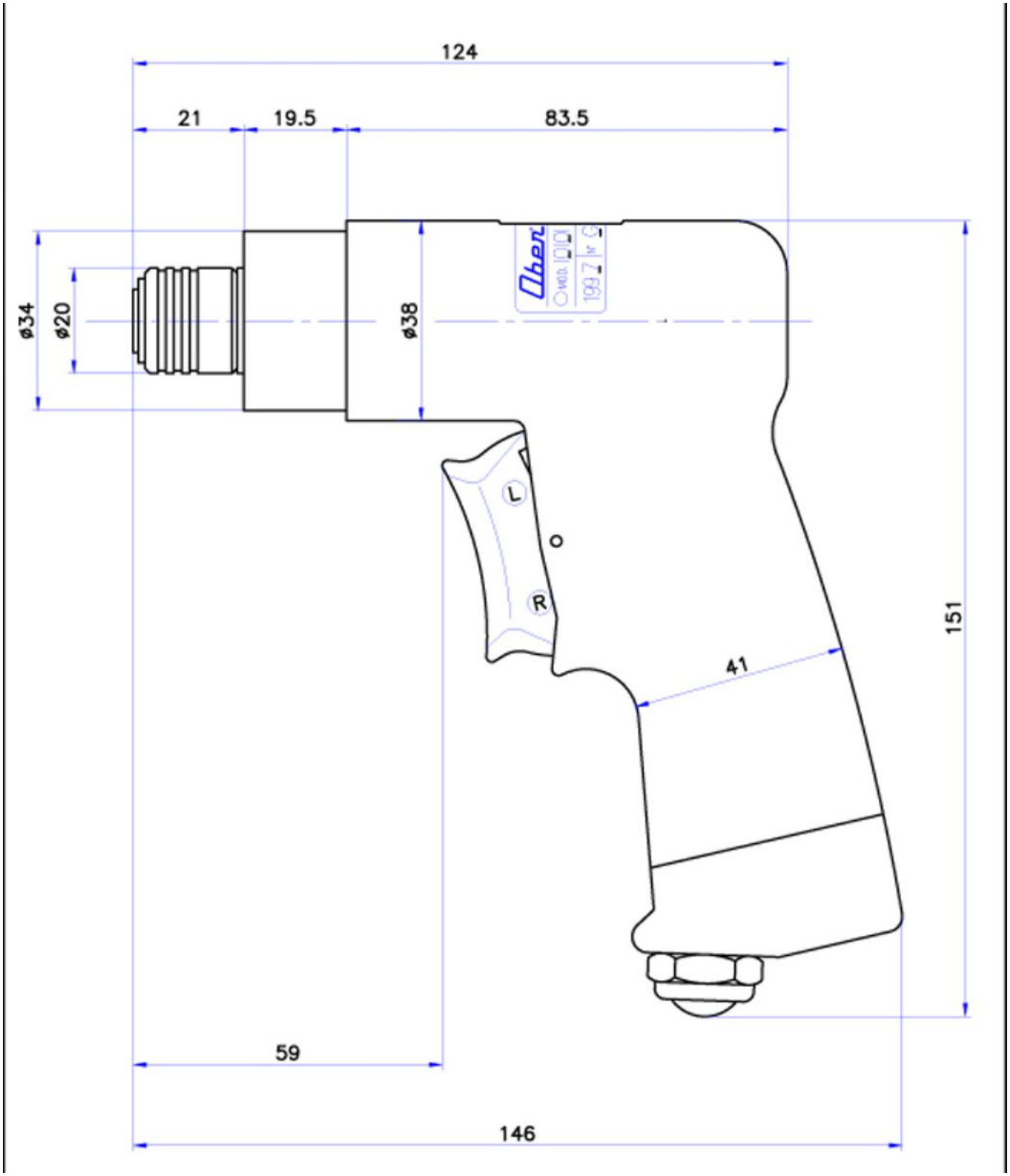
124
21
19.5
83.5
ø34
ø20
ø38
L
O
R
151
41
59
146