Data sheet
MAC22



Technical specification

Model	MAC22
Code	8501008
No. strokes - min.	5000
Tool fitting (cylindrical) - mm	10
Length - mm	155
Body - ø mm	38
Weight - kg	0,9
Air connection	1/4” GAS
Hose - ø min mm	6

Overall dimensions

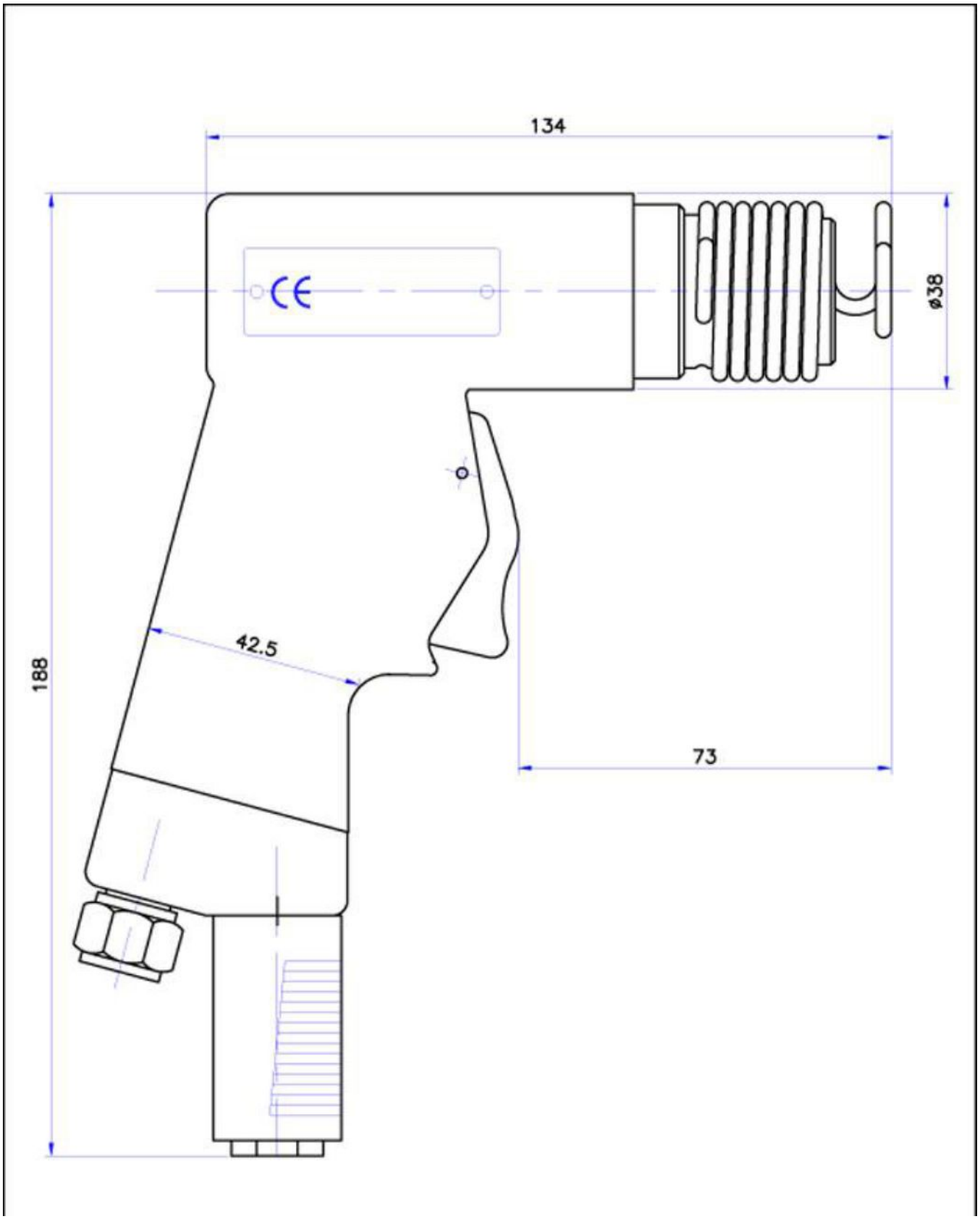
134
ø38
188
42.5
73