MOTORS WITH POWER OVER 1000 W

NK SERIES - Reversible

WATT: 2250 / CONSUMPTION: 2900 Nl/1"

Data sheet

NK150R



1. Cylindrical keyed shaft
2. Grease gun
3. Air inlets
4. Air exhaust

Technical specification

- Model	NK150R
- Code	8731262
Speed rpm - No-load	150
Speed rpm - at Max Power	100
Torque Nm - at Max Power	246
Torque Nm - Stall Torque	600

Form features

The normal delivery condition:
cylindrical shaft and body as shown in the photo.
Optional:
Shaft
- threaded - indication / AF (left rotation excluded - subject to checks for reversible)
- conical - indication /AC
- with collets - indication / AP

Characteristic curves

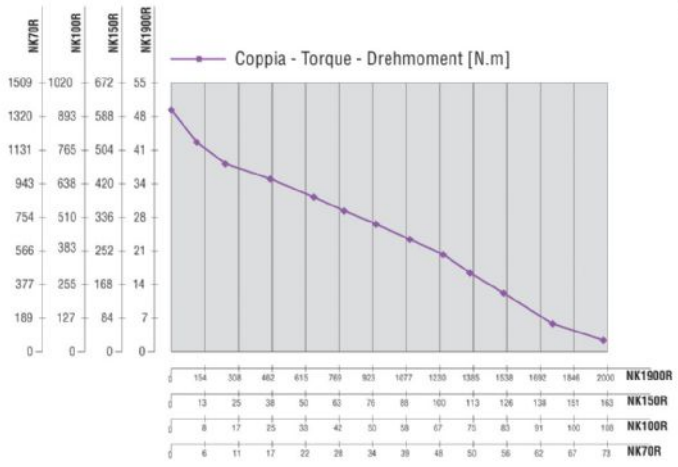

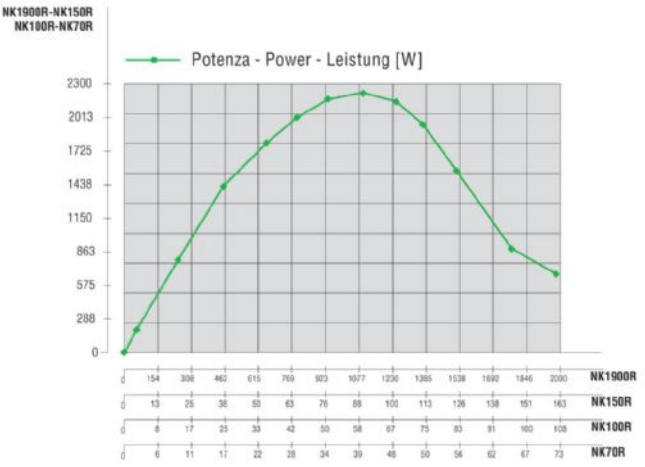

MOTORS WITH POWER OVER 1000 W

NK SERIES - Reversible

WATT: 2250 / CONSUMPTION: 2900 Nl/1"

Data sheet
NK150R

Permissible radial and axial loads

Model	Code	Fr (N)	Fa (N)	Co (N)
NK150R	8731262	11000	8000	54000

Overall dimensions

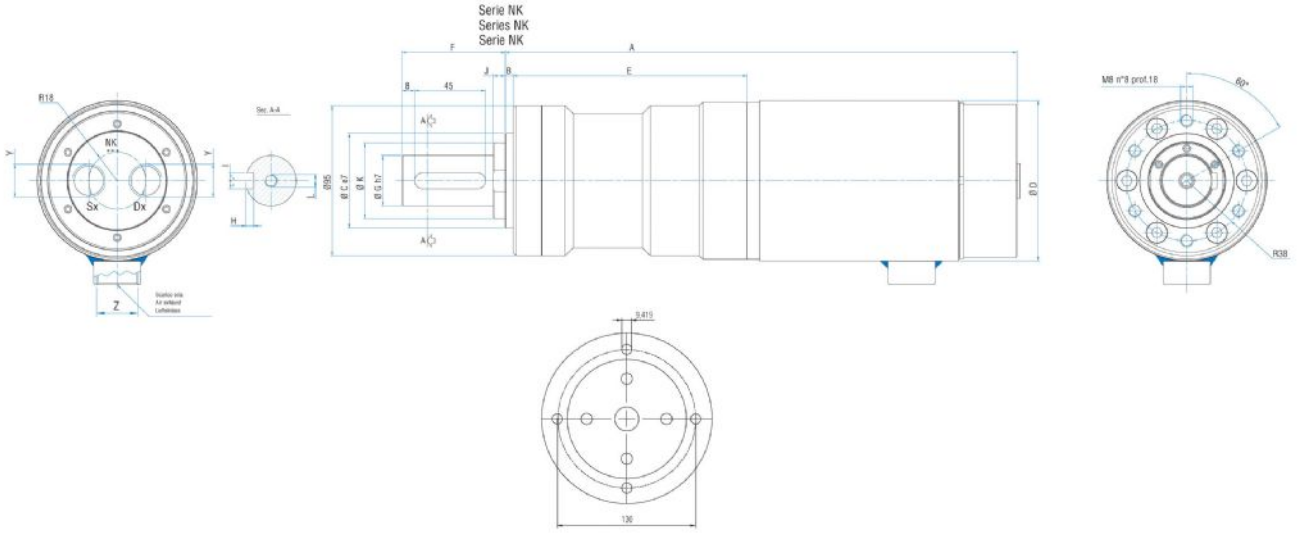

Flange disponibili per alcuni modelli.
Flanges available for some models.
Flansche erhältlich für einige Modelle.

Model	Code	A	B	C	D	E	F	G	H	I	J	K	L	Y	Z
NK150R	8731262	331,8	5	60	101,6	148,3	65,5	32	5	10	7,5	48	M8	1/2"	3/4"