Drilling unit

MRC series - Pneumatic motor - pneumatic thrust and return

Chuck connection : B10

Data sheet
MRC11

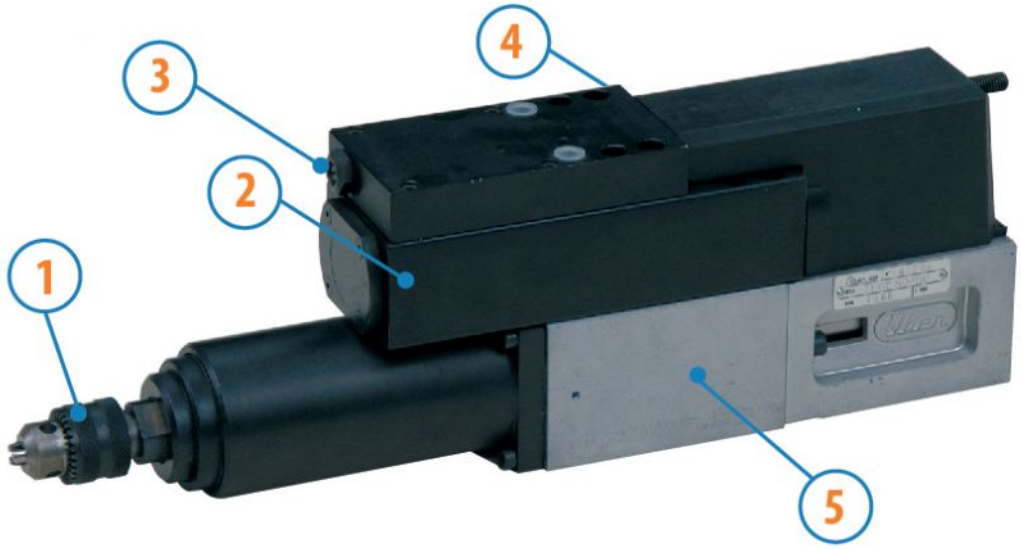

1. Chuck
2. Hydraulic brake
3. Braked stroke speed adjustment screw
4. Micro switching of the return unit
5. Unit body

Technical specification

Model	MRC11
Code	8602019
No-load speed - rpm/min	5500
Drilling capacity mm - Wood	8
Drilling capacity mm - Aluminium	6
Drilling capacity mm - Steel	4
Total stroke - mm	50
Braked stroke - mm	50
Feed thrust at 6 bar - Kg	27
Power - Watt	100
Power - HP	0,13
Weight - Kg	2,7
Air consumption - Nl/cycle	200
Air	1/4’ GAS
Tuyau - ø min	6
Standard chuck - Code	3715411